IL91531

PARALLEL INPUT TONE/PULSE DIALER

HIGH-PERFORMANCE SILICON-GATE CMOS

The IN91531N provides a 4-bit data input and a handshaking signal to serve as microcomputer interfaces. Under microcomputer control the IN91531N generates both a DTMF signal and a pulse output for telephone dialing. All necessary dual-tone frequencies and dial pulse outputs are derived from the widely used TV crystal standard, providing high accuracy and stability. The required sinusoidal waveform for individual tones is digitally synthesized on the chip, resulting in a waveform with very low total harmonic distortion.

- 4-bit parallel data input from microcomputer
- TTL compatible inputs and outputs
- Uses TV crystal standard (3.58 MHz) to derive all frequencies, providing high accuracy and stability
- Operating voltage: 2.5 to 5.5 Volts
- Selectable M/B ratio
- 10 PPS dial rate
- DTMF signaling of digits 0 9, *, #, A, B, C, and D
- Pulse signaling of 0 ~ 9, *, #, and A
- High group tone pre-emphasis: 2 dB
- Low total harmonic distortion in DTMF signaling

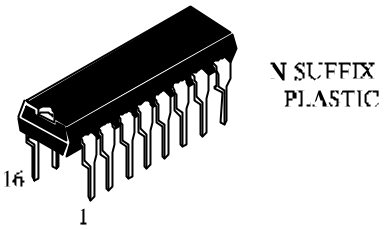

ORDERING INFORMATION
IN91531N
T_A = -10° to 70° C

PIN ASSIGNMENT

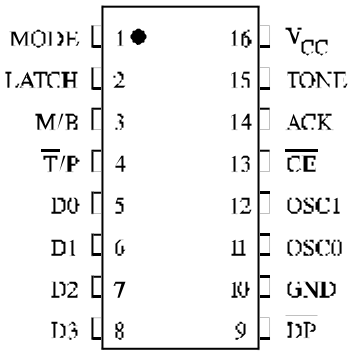

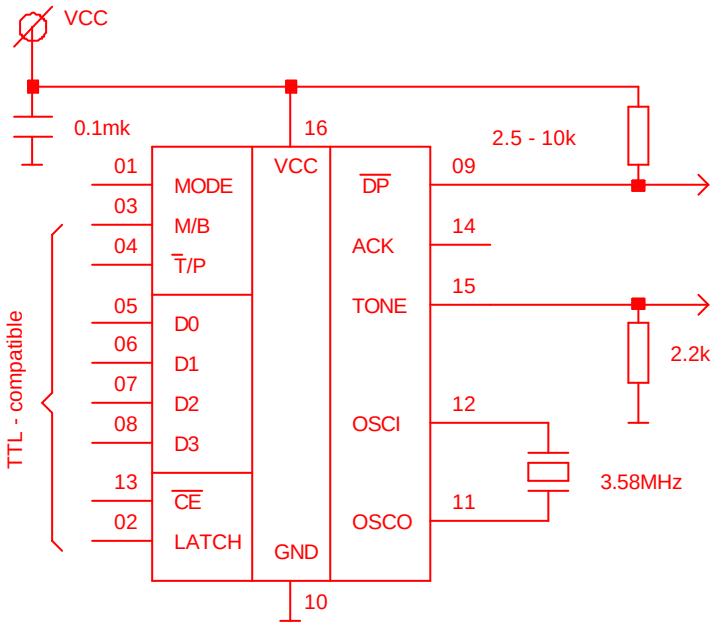

Korzhenevskogo 12, Minsk, 220064, Republic of Belarus
Fax: +375 (17) 278 28 22,
Phone: +375 (17) 278 07 11, 277 24 70, 277 24 61, 277 69 16
E-mail: belms@belms.belpak.minsk.by
URL: www.bms.by

BELMICROSYSTEMS

IL91531

DC ELECTRICAL CHARACTERISTICS (V_{CC}=3.5V, F_{OSC}=3.579545MHz, T_A = +25°C)

Symbol	Parameter	Test Conditions	Guaranteed Limits Min	Guaranteed Limits Max	Unit
V_{CC}	Operating Voltage		2.5	5.5	V
V_{IH}	High-Level Input Voltage		0.8	1	V_{CC}
V_{IL}	Low-Level Input Voltage		0	0.2	V_{CC}
I_{OL1} I_{OL2}	Minimum Output Sink Current, $\overline{DP}$	V_{CC} =2.5 V, V_{OL} = 0.4V V_{CC} =5.0 V, V_{OL} = 0.4V	1 3		mA mA
I_{CC}	Maximum Supply Current (Stand-by)	CE=V_{CC} All outputs unloaded		8	µA
I_{CCP}	Maximum Supply Current (Pulse)	CE=GND All outputs unloaded		1	mA
I_{CCT}	Maximum Supply Current (Tone)	CE=GND All outputs unloaded		1	mA
I_{OHACK}	Minimum Output Current, ACK Source	V_{CC} = 5.0 V, V_{OH} = 2.4 V	1.6		mA
I_{OLACK}	Minimum Output Current, ACK Sink	V_{CC} = 5.0 V, V_{OL} = 0.4 V	4.0		mA
V_{OR}	Single Row Tone Output Amplitude	V_{CC} = 2.5 V, R_L = 2.2 kΩ	500		mVp-p
		V_{CC} = 5.5 V, R_L = 2.2 kΩ		1500	
V_{OC}	Single Column Tone Output Amplitude	V_{CC} = 2.5 V, R_L = 2.2 kΩ	500		mVp-p
		V_{CC} = 5.5 V, R_L = 2.2 kΩ		1600	

AC ELECTRICAL CHARACTERISTICS

Parameter	Symbol	Condition	Guaranteed Limits Min	Guaranteed Limits Typ	Guaranteed Limits Max	Unit
Make/break Ratio	M/B	M/B = V_{CC}		1/2		
		M/B = GND		2/3		
Make Time	T_M	M/B = 1/2		33.3		ms
		M/B = 2/3		40		
Break Time	T_B	M/B = 1/2		66.6		ms
		M/B = 2/3		60		
Inter-Digit Pause Time	T_{IDP}	M/B = 1/2		791		ms
		M/B = 2/3		763		
Predigit Pause	T_{PDP}	M/B = 1/2		35		ms
		M/B = 2/3		21		
Minimum Tone Duration	T_{MFD}			70		ms
Minimum Tone Inter-digit Pause	T_{TIDP}			70		ms
Tone Output Pre-digit Pause	T_{TPDP}			0		ms
Oscillator Set-up Time	T_{START}			5		ms

Korzhenevskogo 12, Minsk, 220064, Republic of Belarus
Fax: +375 (17) 278 28 22,
Phone: +375 (17) 278 07 11, 277 24 70, 277 24 61, 277 69 16
E-mail: belms@belms.belpak.minsk.by
URL: www.bms.by
BELMICROSYSTEMS

Korzhenevskogo 12, Minsk, 220064, Republic of Belarus
Fax: +375 (17) 278 28 22,
Phone: +375 (17) 278 07 11, 277 24 70, 277 24 61, 277 69 16
E-mail: belms@belms.belpak.minsk.by
URL: www.bms.by
BELMICROSYSTEMS