To our customers,

Old Company Name in Catalogs and Other Documents

On April 1st, 2010, NEC Electronics Corporation merged with Renesas Technology Corporation, and Renesas Electronics Corporation took over all the business of both companies. Therefore, although the old company name remains in this document, it is a valid Renesas Electronics document. We appreciate your understanding.

Renesas Electronics website: http://www.renesas.com

April 1st, 2010
Renesas Electronics Corporation

Issued by: Renesas Electronics Corporation (http://www.renesas.com)

Send any inquiries to http://www.renesas.com/inquiry.

RENESAS

Notice

1. All information included in this document is current as of the date this document is issued. Such information, however, is subject to change without any prior notice. Before purchasing or using any Renesas Electronics products listed herein, please confirm the latest product information with a Renesas Electronics sales office. Also, please pay regular and careful attention to additional and different information to be disclosed by Renesas Electronics such as that disclosed through our website.
2. Renesas Electronics does not assume any liability for infringement of patents, copyrights, or other intellectual property rights of third parties by or arising from the use of Renesas Electronics products or technical information described in this document. No license, express, implied or otherwise, is granted hereby under any patents, copyrights or other intellectual property rights of Renesas Electronics or others.
3. You should not alter, modify, copy, or otherwise misappropriate any Renesas Electronics product, whether in whole or in part.
4. Descriptions of circuits, software and other related information in this document are provided only to illustrate the operation of semiconductor products and application examples. You are fully responsible for the incorporation of these circuits, software, and information in the design of your equipment. Renesas Electronics assumes no responsibility for any losses incurred by you or third parties arising from the use of these circuits, software, or information.
5. When exporting the products or technology described in this document, you should comply with the applicable export control laws and regulations and follow the procedures required by such laws and regulations. You should not use Renesas Electronics products or the technology described in this document for any purpose relating to military applications or use by the military, including but not limited to the development of weapons of mass destruction. Renesas Electronics products and technology may not be used for or incorporated into any products or systems whose manufacture, use, or sale is prohibited under any applicable domestic or foreign laws or regulations.
6. Renesas Electronics has used reasonable care in preparing the information included in this document, but Renesas Electronics does not warrant that such information is error free. Renesas Electronics assumes no liability whatsoever for any damages incurred by you resulting from errors in or omissions from the information included herein.
7. Renesas Electronics products are classified according to the following three quality grades: "Standard", "High Quality", and "Specific". The recommended applications for each Renesas Electronics product depends on the product's quality grade, as indicated below. You must check the quality grade of each Renesas Electronics product before using it in a particular application. You may not use any Renesas Electronics product for any application categorized as "Specific" without the prior written consent of Renesas Electronics. Further, you may not use any Renesas Electronics product for any application for which it is not intended without the prior written consent of Renesas Electronics. Renesas Electronics shall not be in any way liable for any damages or losses incurred by you or third parties arising from the use of any Renesas Electronics product for an application categorized as "Specific" or for which the product is not intended where you have failed to obtain the prior written consent of Renesas Electronics. The quality grade of each Renesas Electronics product is "Standard" unless otherwise expressly specified in a Renesas Electronics data sheets or data books, etc.

   "Standard": Computers; office equipment; communications equipment; test and measurement equipment; audio and visual equipment; home electronic appliances; machine tools; personal electronic equipment; and industrial robots.

   "High Quality": Transportation equipment (automobiles, trains, ships, etc.); traffic control systems; anti-disaster systems; anti-crime systems; safety equipment; and medical equipment not specifically designed for life support.

   "Specific": Aircraft; aerospace equipment; submersible repeaters; nuclear reactor control systems; medical equipment or systems for life support (e.g. artificial life support devices or systems), surgical implantations, or healthcare intervention (e.g. excision, etc.), and any other applications or purposes that pose a direct threat to human life.
8. You should use the Renesas Electronics products described in this document within the range specified by Renesas Electronics, especially with respect to the maximum rating, operating supply voltage range, movement power voltage range, heat radiation characteristics, installation and other product characteristics. Renesas Electronics shall have no liability for malfunctions or damages arising out of the use of Renesas Electronics products beyond such specified ranges.
9. Although Renesas Electronics endeavors to improve the quality and reliability of its products, semiconductor products have specific characteristics such as the occurrence of failure at a certain rate and malfunctions under certain use conditions. Further, Renesas Electronics products are not subject to radiation resistance design. Please be sure to implement safety measures to guard them against the possibility of physical injury, and injury or damage caused by fire in the event of the failure of a Renesas Electronics product, such as safety design for hardware and software including but not limited to redundancy, fire control and malfunction prevention, appropriate treatment for aging degradation or any other appropriate measures. Because the evaluation of microcomputer software alone is very difficult, please evaluate the safety of the final products or system manufactured by you.
10. Please contact a Renesas Electronics sales office for details as to environmental matters such as the environmental compatibility of each Renesas Electronics product. Please use Renesas Electronics products in compliance with all applicable laws and regulations that regulate the inclusion or use of controlled substances, including without limitation, the EU RoHS Directive. Renesas Electronics assumes no liability for damages or losses occurring as a result of your noncompliance with applicable laws and regulations.
11. This document may not be reproduced or duplicated, in any form, in whole or in part, without prior written consent of Renesas Electronics.
12. Please contact a Renesas Electronics sales office if you have any questions regarding the information contained in this document or Renesas Electronics products, or if you have any other inquiries.

(Note 1) "Renesas Electronics" as used in this document means Renesas Electronics Corporation and also includes its majority-owned subsidiaries.

(Note 2) "Renesas Electronics product(s)" means any product developed or manufactured by or for Renesas Electronics.

DATA SHEET

PHOTOCOUPLER

PS2561-1,PS2561L-1,PS2561L1-1,PS2561L2-1

HIGH ISOLATION VOLTAGE SINGLE TRANSISTOR TYPE MULTI PHOTOCOUPLER SERIES

–NEPOC Series–

DESCRIPTION

The PS2561-1 is optically coupled isolators containing a GaAs light emitting diode and an NPN silicon phototransistor.

The PS2561-1 is in a plastic DIP (Dual In-line Package) and the PS2561L-1 is lead bending type (Gull-wing) for surface mount.

The PS2561L1-1 is lead bending type for long creepage distance.

The PS2561L2-1 is lead bending type for long creepage distance (Gull-wing) for surface mount.

FEATURES

- High Isolation voltage (BV = 5 000 Vr.m.s.)
- High collector to emitter voltage (V_{CEO} = 80 V)
- High current transfer ratio (CTR = 200% TYP.)
- High-speed switching (t_r = 3 μs TYP., t_f = 5 μs TYP.)
- Ordering number of taping product: PS2561L-1-E3, E4, F3, F4, PS2561L2-1-E3, E4
- Safety standards
  - UL approved: No. E72422
  - CSA approved: No. CA 101391
  - BSI approved: No. 7112/7420
  - SEMKO approved: No. 303059, 307244
  - NEMKO approved: No. P03200272, P03200747
  - DEMKO approved: No. 312341, 312340
  - FIMKO approved: No. FI 10620, FI 11898
  - <R> DIN EN60747-5-2 (VDE0884 Part2) approved: No. 40008862 (Option)

PIN CONNECTION
(Top View)

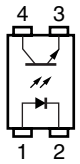

1. Anode
2. Cathode
3. Emitter
4. Collector

APPLICATIONS

- Power supply
- Telephone/FAX.
- FA/OA equipment
- Programmable logic controller

Document No. PN10234EJ04V0DS (4th edition)
Date Published December 2008 NS
Printed in Japan

The mark <R> shows major revised points.

The revised points can be easily searched by copying an "<R>" in the PDF file and specifying it in the "Find what:" field.

PACKAGE DIMENSIONS (UNIT : mm)

DIP Type (New package)

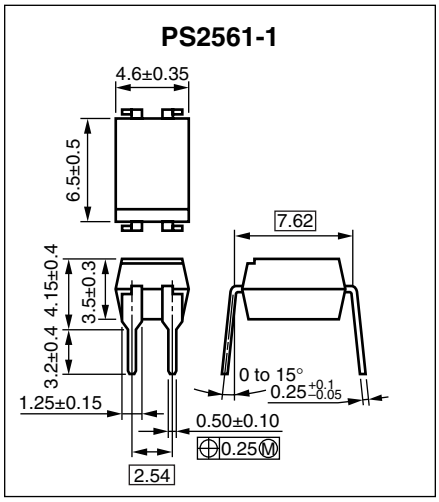

DIP Type

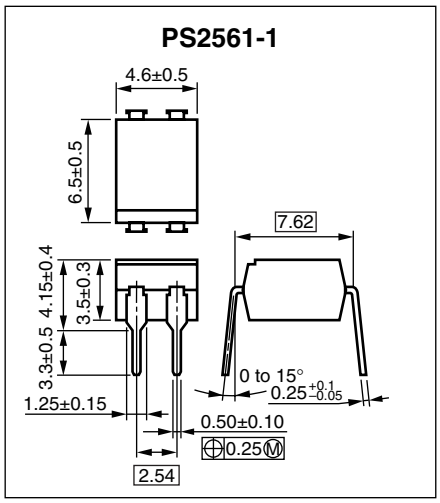

Lead Bending Type (New package)

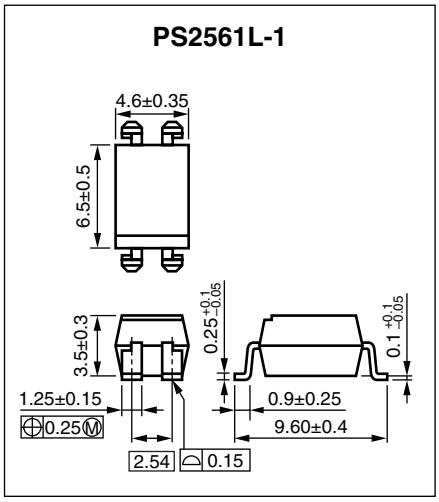

Lead Bending Type

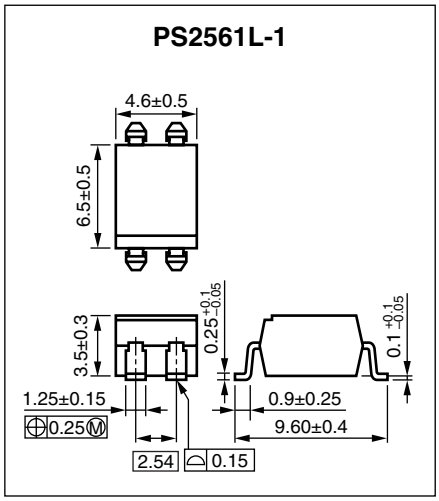

Lead Bending Type For Long Creepage Distance (New Package)

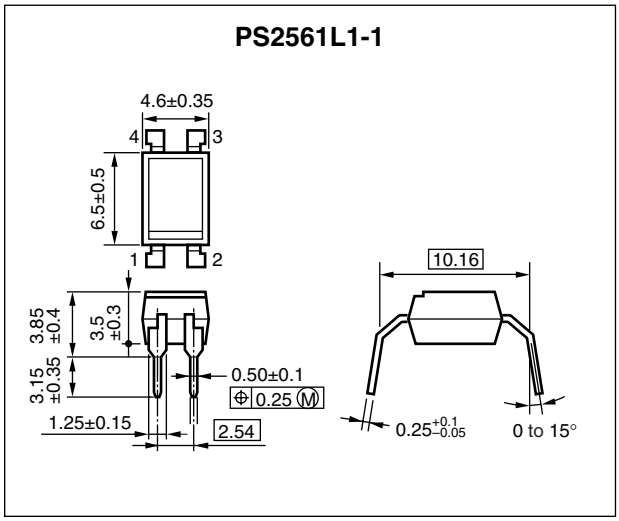

Lead Bending Type For Long Creepage Distance

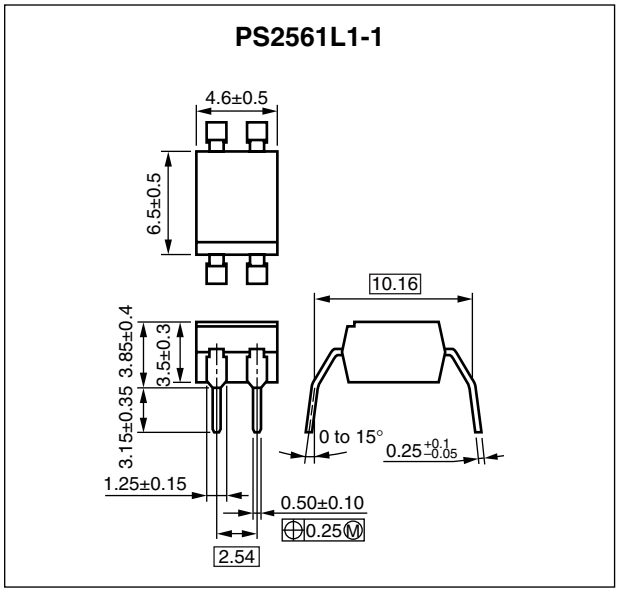

Lead Bending Type For Long Creepage Distance (Gull-Wing) (New Package)

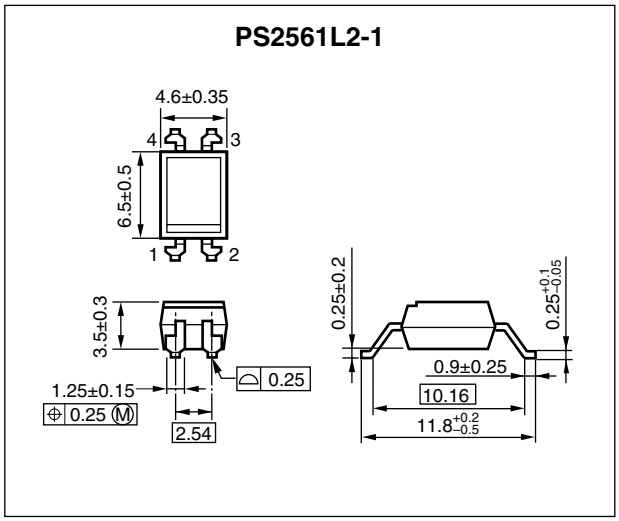

Lead Bending Type For Long Creepage Distance (Gull-Wing)

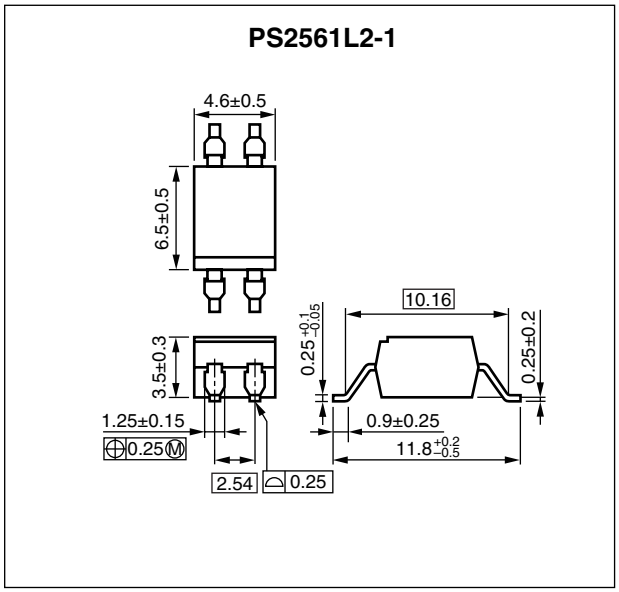

<R> **MARKING EXAMPLE**

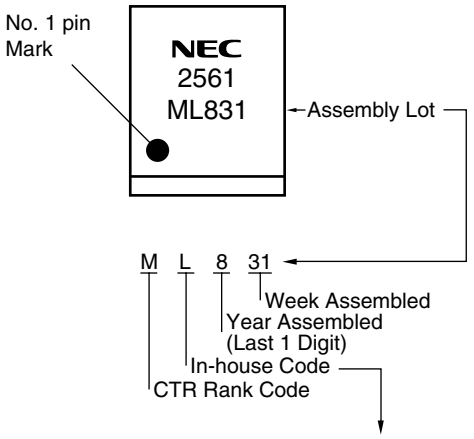

	Package	Made in Japan	Made in Taiwan
Pb-Free	Standard PKG	L	N
Pb-Free	New PKG	J	K
Pb-Free and Halogen Free *1	New PKG	R	Y

***1** Special version

<R> ORDERING INFORMATION

Part Number	Order Number	Solder Plating Specification	Packing Style	Safety Standard Approval	Application Part Number *1
PS2561-1	PS2561-1-A	Pb-Free	Magazine case 100 pcs	Standard products (UL, CSA, BSI, NEMKO, SEMKO, DEMKO, FIMKO approved)	PS2561-1
PS2561L-1	PS2561L-1-A				
PS2561L1-1	PS2561L1-1-A				
PS2561L2-1	PS2561L2-1-A				
PS2561L-1-E3	PS2561L-1-E3-A		Embossed Tape 1 000 pcs/reel		
PS2561L-1-E4	PS2561L-1-E4-A				
PS2561L-1-F3	PS2561L-1-F3-A		Embossed Tape 2 000 pcs/reel		
PS2561L-1-F4	PS2561L-1-F4-A				
PS2561L2-1-E3	PS2561L2-1-E3-A		Embossed Tape 1 000 pcs/reel		
PS2561L2-1-E4	PS2561L2-1-E4-A				
PS2561-1-V	PS2561-1-V-A		Magazine case 100 pcs	DIN EN60747-5-2 (VDE0884 Part2) approved products (Option)	
PS2561L-1-V	PS2561L-1-V-A				
PS2561L1-1-V	PS2561L1-1-V-A				
PS2561L2-1-V	PS2561L2-1-V-A				
PS2561L-1-V-E3	PS2561L-1-V-E3-A		Embossed Tape 1 000 pcs/reel		
PS2561L-1-V-E4	PS2561L-1-V-E4-A				
PS2561L-1-V-F3	PS2561L-1-V-F3-A		Embossed Tape 2 000 pcs/reel		
PS2561L-1-V-F4	PS2561L-1-V-F4-A				
PS2561L2-1-V-E3	PS2561L2-1-V-E3-A		Embossed Tape 1 000 pcs/reel		
PS2561L2-1-V-E4	PS2561L2-1-V-E4-A				
PS2561-1	PS2561-1Y-A	Special version (Pb-Free and Halogen Free)	Magazine case 100 pcs	Standard products (UL, CSA, BSI, NEMKO, SEMKO, DEMKO, FIMKO approved)	PS2561-1
PS2561L-1	PS2561L-1Y-A				
PS2561L1-1	PS2561L1-1Y-A				
PS2561L2-1	PS2561L2-1Y-A				
PS2561L-1-F3	PS2561L-1Y-F3-A		Embossed Tape 2 000 pcs/reel		
PS2561L2-1-E3	PS2561L2-1Y-E3-A		Embossed Tape 1 000 pcs/reel		
PS2561-1-V	PS2561-1Y-V-A		Magazine case 100 pcs	DIN EN60747-5-2 (VDE0884 Part2) approved products (Option)	
PS2561L-1-V	PS2561L-1Y-V-A				
PS2561L1-1-V	PS2561L1-1Y-V-A				
PS2561L2-1-V	PS2561L2-1Y-V-A				
PS2561L-1-V-F3	PS2561L-1Y-V-F3-A		Embossed Tape 2 000 pcs/reel		
PS2561L2-1-V-E3	PS2561L2-1Y-V-E3-A		Embossed Tape 1 000 pcs/reel		

***1** For the application of the Safety Standard, following part number should be used.

ABSOLUTE MAXIMUM RATINGS (T_A = 25°C, unless otherwise specified)

Parameter		Symbol	Ratings	Unit
Diode	Reverse Voltage	V_R	6	V
	Forward Current (DC)	I_F	80	mA
	Power Dissipation Derating	ΔP_D/°C	1.5	mW/°C
	Power Dissipation	P_D	150	mW
	Peak Forward Current*1	I_{FP}	1	A
Transistor	Collector to Emitter Voltage	V_{CEO}	80	V
	Emitter to Collector Voltage	V_{ECO}	7	V
	Collector Current	I_C	50	mA
	Power Dissipation Derating	ΔP_C/°C	1.5	mW/°C
	Power Dissipation	P_C	150	mW
Isolation Voltage*2		BV	5 000	Vr.m.s.
Operating Ambient Temperature		T_A	–55 to +100	°C
Storage Temperature		T_{stg}	–55 to +150	°C

***1** PW = 100 μs, Duty Cycle = 1%

***2** AC voltage for 1 minute at T_A = 25°C, RH = 60% between input and output
Pins 1-2 shorted together, 3-4 shorted together.

ELECTRICAL CHARACTERISTICS (T_A = 25°C)

Parameter		Symbol	Conditions	MIN.	TYP.	MAX.	Unit
Diode	Forward Voltage	V_F	I_F = 10 mA		1.17	1.4	V
	Reverse Current	I_R	V_R = 5 V			5	μA
	Terminal Capacitance	C_t	V = 0 V, f = 1.0 MHz		50		pF
Transistor	Collector to Emitter Dark Current	I_{CEO}	V_{CE} = 80 V, I_F = 0 mA			100	nA
Coupled	Current Transfer Ratio (I_C/I_F)*1	CTR	I_F = 5 mA, V_{CE} = 5 V	80	200	400	%
	Collector Saturation Voltage	$V_{CE\ (sat)}$	I_F = 10 mA, I_C = 2 mA			0.3	V
	Isolation Resistance	R_{I-O}	V_{I-O} = 1.0 kV_{DC}	10^{11}			Ω
	Isolation Capacitance	C_{I-O}	V = 0 V, f = 1.0 MHz		0.5		pF
	Rise Time*2	t_r	V_{CC} = 10 V, I_C = 2 mA, R_L = 100 Ω		3		μs
	Fall Time*2	t_f			5		

***1** CTR rank

L : 200 to 400 (%)

M : 80 to 240 (%)

D : 100 to 300 (%)

H : 80 to 160 (%)

W : 130 to 260 (%)

<R> ***2** Test circuit for switching time

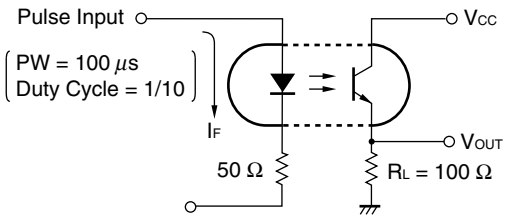

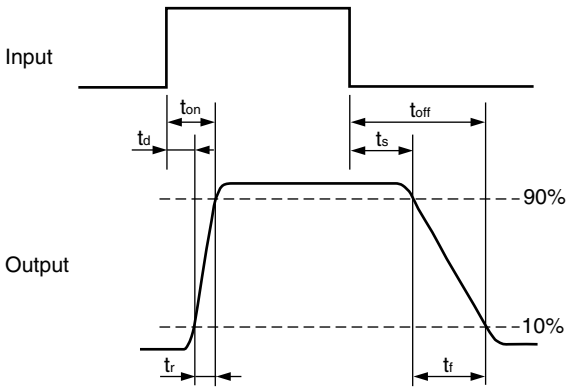

TYPICAL CHARACTERISTICS (T_A = 25°C, unless otherwise specified)

DIODE POWER DISSIPATION vs. AMBIENT TEMPERATURE

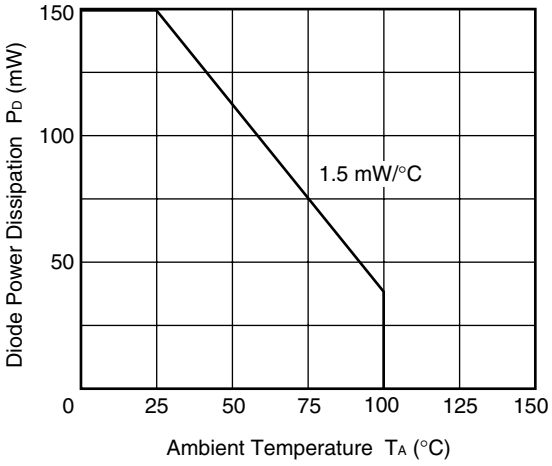

TRANSISTOR POWER DISSIPATION vs. AMBIENT TEMPERATURE

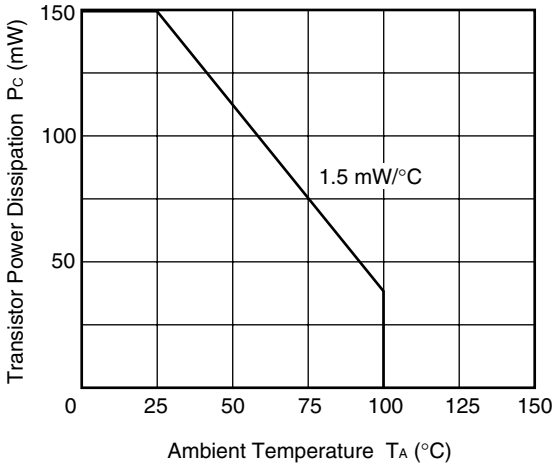

FORWARD CURRENT vs. FORWARD VOLTAGE

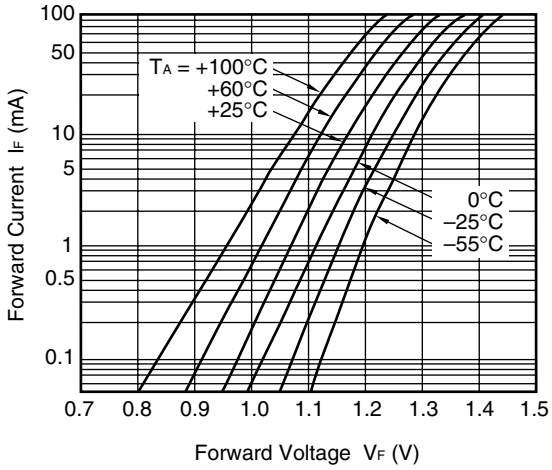

COLLECTOR CURRENT vs. COLLECTOR TO EMITTER VOLTAGE

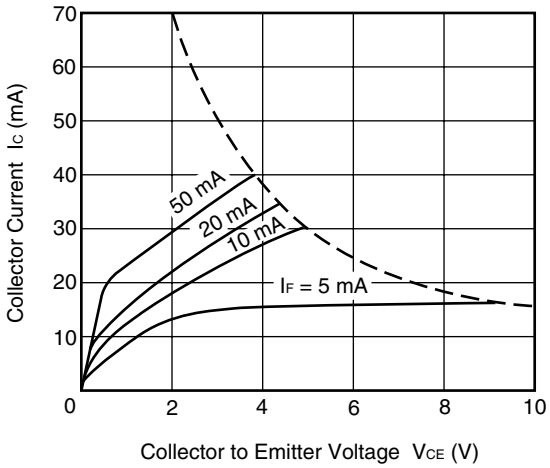

COLLECTOR TO EMITTER DARK CURRENT vs. AMBIENT TEMPERATURE

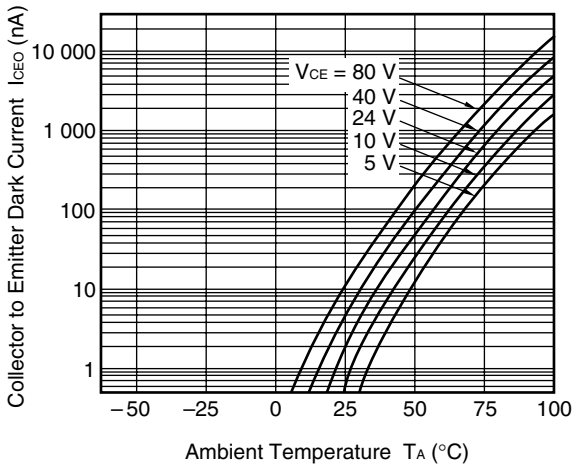

COLLECTOR CURRENT vs. COLLECTOR SATURATION VOLTAGE

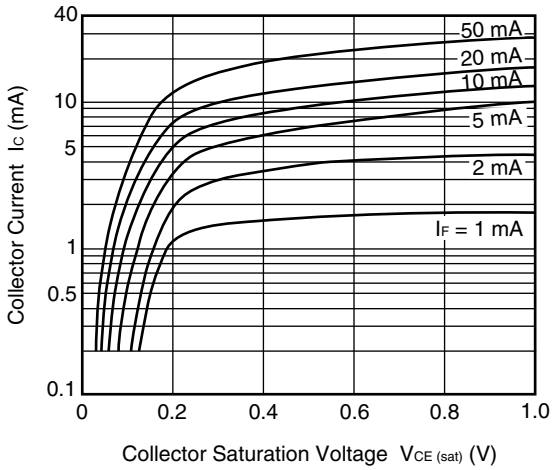

Remark The graphs indicate nominal characteristics.

NORMALIZED CURRENT TRANSFER RATIO vs. AMBIENT TEMPERATURE

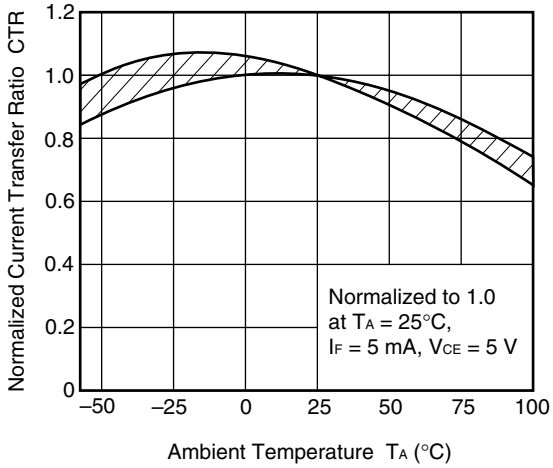

CURRENT TRANSFER RATIO vs. FORWARD CURRENT

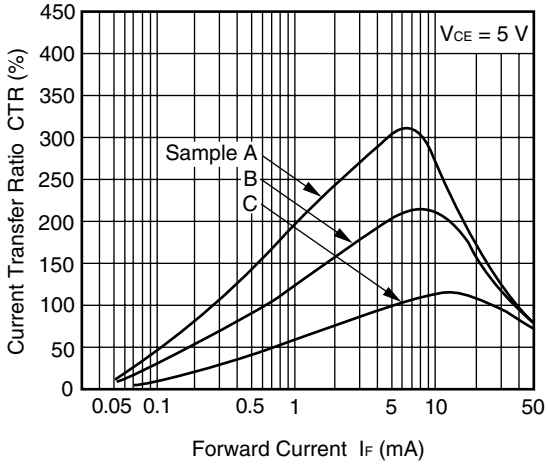

SWITCHING TIME vs. LOAD RESISTANCE

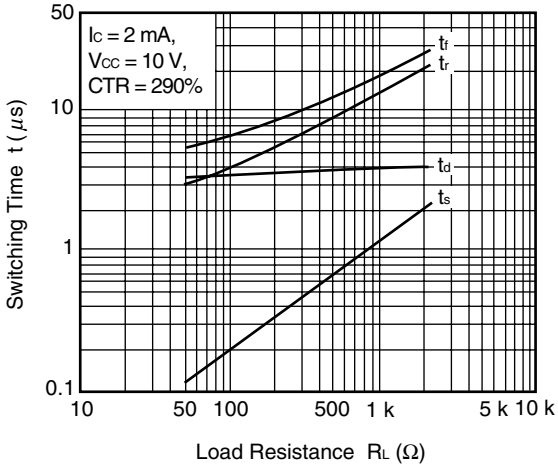

SWITCHING TIME vs. LOAD RESISTANCE

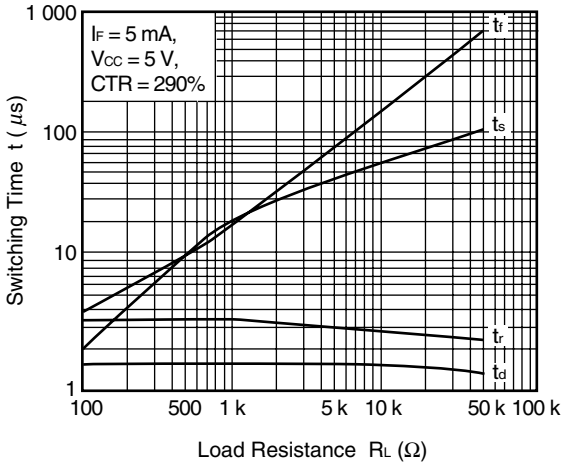

FREQUENCY RESPONSE

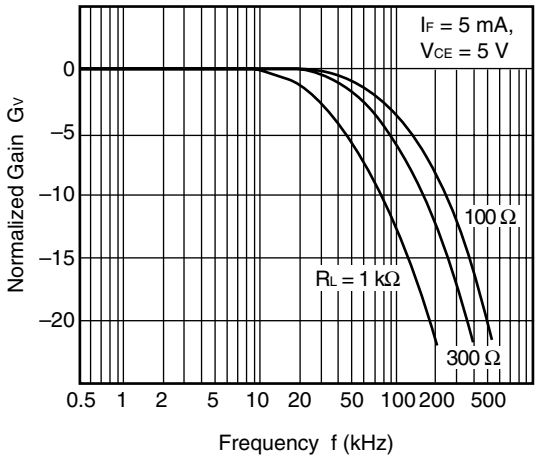

LONG TERM CTR DEGRADATION

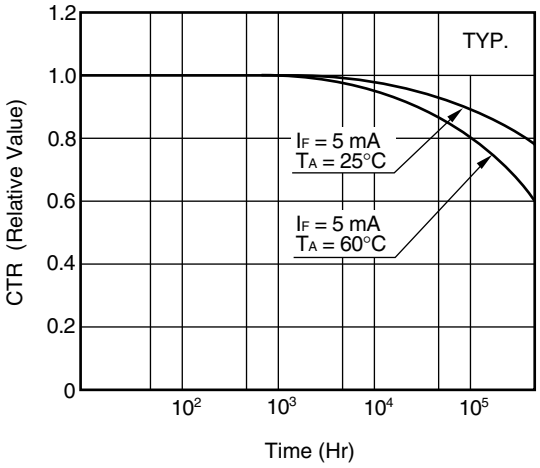

Remark The graphs indicate nominal characteristics.

TAPING SPECIFICATIONS (UNIT : mm)

Outline and Dimensions (Tape)

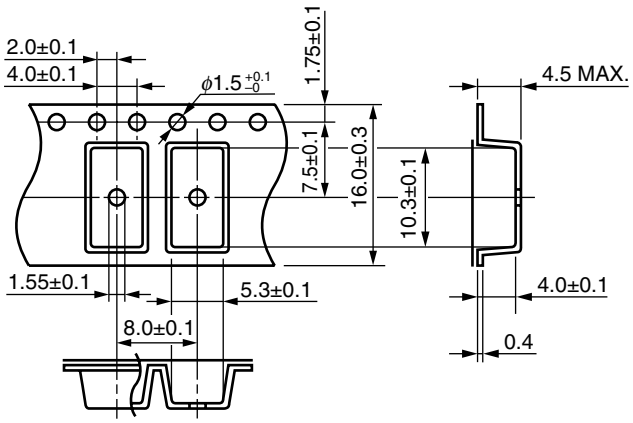

Tape Direction

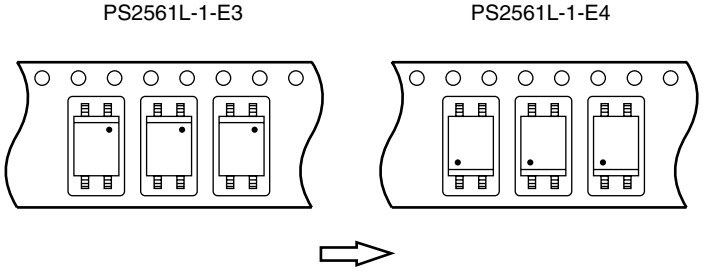

Outline and Dimensions (Reel)

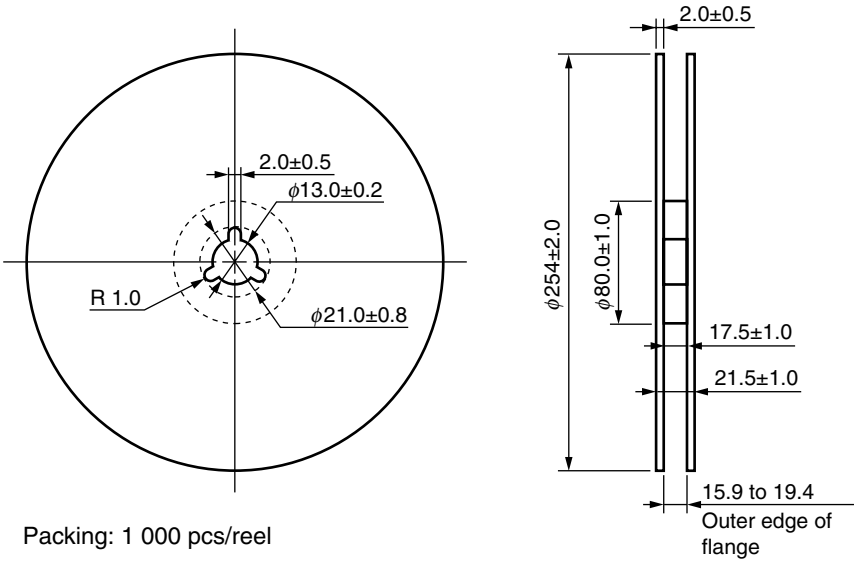

Packing: 1 000 pcs/reel

Outline and Dimensions (Tape)

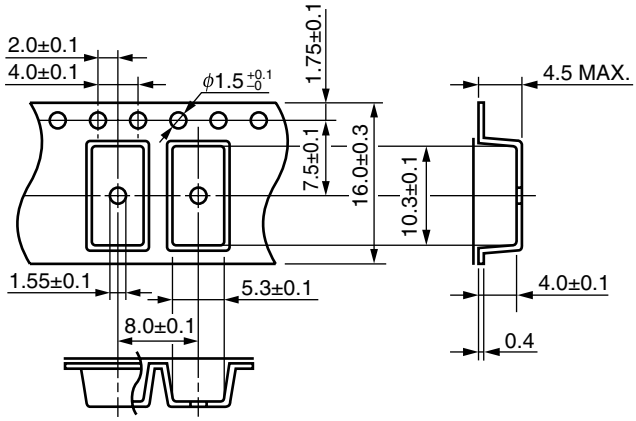

Tape Direction

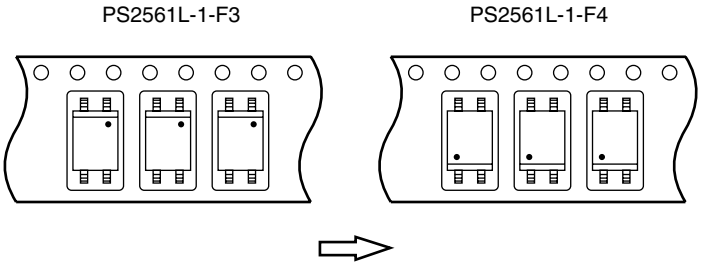

Outline and Dimensions (Reel)

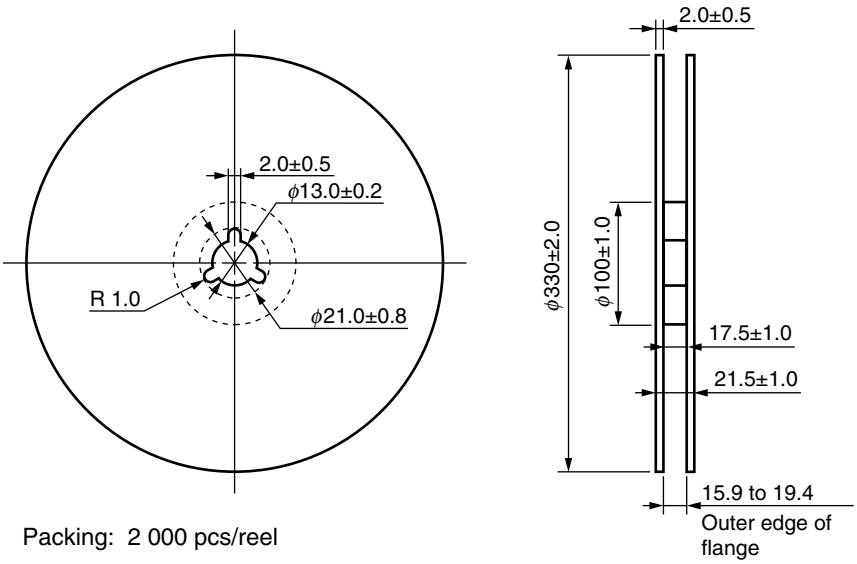

Packing: 2 000 pcs/reel

Outline and Dimensions (Tape)

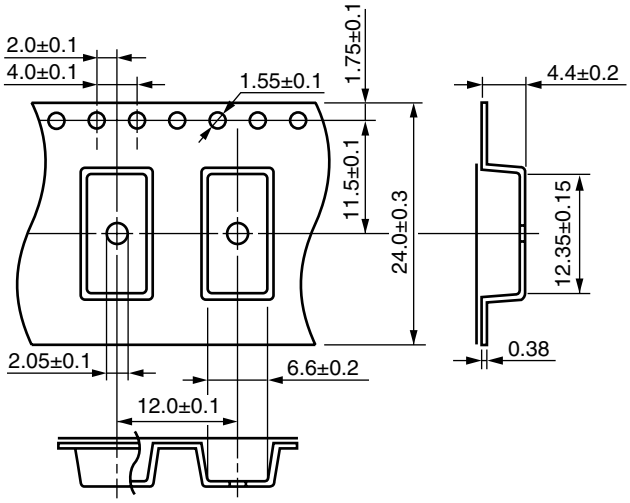

Tape Direction

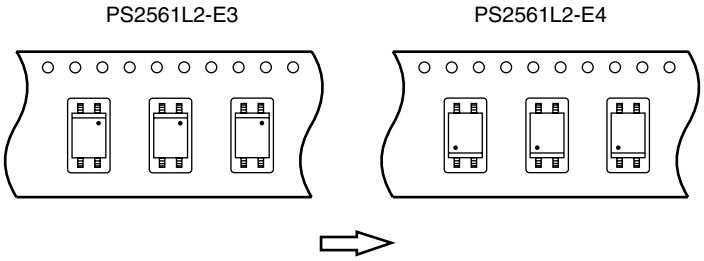

Outline and Dimensions (Reel)

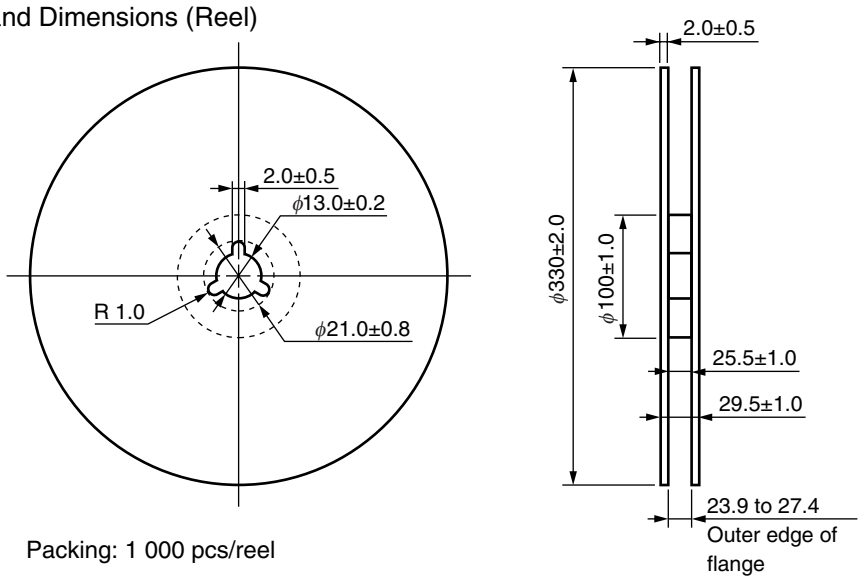

Packing: 1 000 pcs/reel

NOTES ON HANDLING

1. Recommended soldering conditions

(1) Infrared reflow soldering

- Peak reflow temperature — 260°C or below (package surface temperature)
- Time of peak reflow temperature — 10 seconds or less
- Time of temperature higher than 220°C — 60 seconds or less
- Time to preheat temperature from 120 to 180°C — 120±30 s
- Number of reflows — Three
- Flux — Rosin flux containing small amount of chlorine (The flux with a maximum chlorine content of 0.2 Wt% is recommended.)

Recommended Temperature Profile of Infrared Reflow

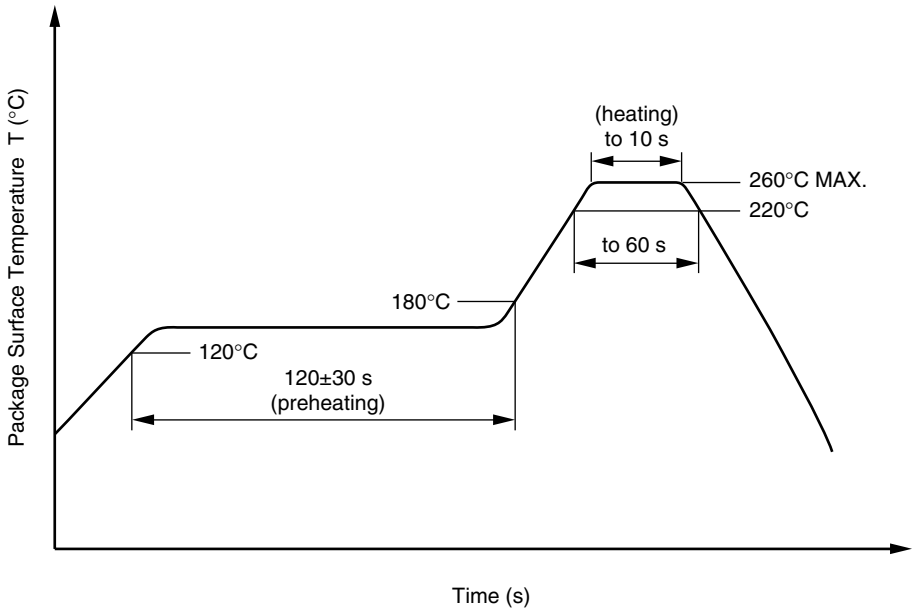

(2) Wave soldering

- Temperature — 260°C or below (molten solder temperature)
- Time — 10 seconds or less
- Preheating conditions — 120°C or below (package surface temperature)
- Number of times — One (Allowed to be dipped in solder including plastic mold portion.)
- Flux — Rosin flux containing small amount of chlorine (The flux with a maximum chlorine content of 0.2 Wt% is recommended.)

(3) Soldering by soldering iron

- Peak temperature (lead part temperature) — 350°C or below
- Time (each pins) — 3 seconds or less
- Flux — Rosin flux containing small amount of chlorine (The flux with a maximum chlorine content of 0.2 Wt% is recommended.)

(a) Soldering of leads should be made at the point 1.5 to 2.0 mm from the root of the lead.

(b) Please be sure that the temperature of the package would not be heated over 100°C.

(4) Cautions

- Fluxes

  Avoid removing the residual flux with freon-based and chlorine-based cleaning solvent.

2. Cautions regarding noise

Be aware that when voltage is applied suddenly between the photocoupler's input and output or between collector-emitters at startup, the output transistor may enter the on state, even if the voltage is within the absolute maximum ratings.

3. Measurement conditions of current transfer ratios (CTR), which differ according to photocoupler

Check the setting values before use, since the forward current conditions at CTR measurement differ according to product.

When using products other than at the specified forward current, the characteristics curves may differ from the standard curves due to CTR value variations or the like. This tendency may sometimes be obvious, especially below I_F = 1 mA.

Therefore, check the characteristics under the actual operating conditions and thoroughly take variations or the like into consideration before use.

USAGE CAUTIONS

1. Protect against static electricity when handling.
2. Avoid storage at a high temperature and high humidity.

<R> SPECIFICATION OF VDE MARKS LICENSE DOCUMENT

Parameter	Symbol	Spec.	Unit
Climatic test class (IEC 60068-1/DIN EN 60068-1)		55/100/21	
Dielectric strength maximum operating isolation voltage Test voltage (partial discharge test, procedure a for type test and random test) $U_{pr} = 1.5 \times U_{IORM}$, $P_d < 5$ pC	 U_{IORM} U_{pr}	 890 1 335	 V_{peak} V_{peak}
Test voltage (partial discharge test, procedure b for all devices) $U_{pr} = 1.875 \times U_{IORM}$, $P_d < 5$ pC	U_{pr}	1 669	V_{peak}
Highest permissible overvoltage	U_{TR}	8 000	V_{peak}
Degree of pollution (DIN EN 60664-1 VDE0110 Part 1)		2	
Clearance distance		>7.0	mm
Creepage distance		>7.0	mm
Comparative tracking index (IEC 60112/DIN EN 60112 (VDE 0303 Part 11))	CTI	175	
Material group (DIN EN 60664-1 VDE0110 Part 1)		III a	
Storage temperature range	T_{stg}	–55 to +150	°C
Operating temperature range	T_A	–55 to +100	°C
Isolation resistance, minimum value V_{IO} = 500 V dc at T_A = 25°C V_{IO} = 500 V dc at T_A MAX. at least 100°C	 Ris MIN. Ris MIN.	 10^{12} 10^{11}	 Ω Ω
Safety maximum ratings (maximum permissible in case of fault, see thermal derating curve) Package temperature Current (input current I_F, Psi = 0) Power (output or total power dissipation) Isolation resistance V_{IO} = 500 V dc at T_A = Tsi	 Tsi Isi Psi Ris MIN.	 175 400 700 10^9	 °C mA mW Ω

Caution GaAs Products	This product uses gallium arsenide (GaAs). GaAs vapor and powder are hazardous to human health if inhaled or ingested, so please observe the following points. • Follow related laws and ordinances when disposing of the product. If there are no applicable laws and/or ordinances, dispose of the product as recommended below. 1. Commission a disposal company able to (with a license to) collect, transport and dispose of materials that contain arsenic and other such industrial waste materials. 2. Exclude the product from general industrial waste and household garbage, and ensure that the product is controlled (as industrial waste subject to special control) up until final disposal. • Do not burn, destroy, cut, crush, or chemically dissolve the product. • Do not lick the product or in any way allow it to enter the mouth.