TYN625--TYN1225 Series 25A SCRs

DESCRIPTION:

TYN625--TYN1225 series of silicon controlled rectifiers are specifically designed for medium power switching and phase control applications.

High current density due to double mesa technology; SIPOS and Glass Passivation. technology used has reliable operation up to 125℃ junction temperature. Low Igt parts available.

Typical applications are in input rectification (softstart) and these products are designed to be used with International Rectifier input diodes, switches and output rectifiers which are available in identical package outlines.

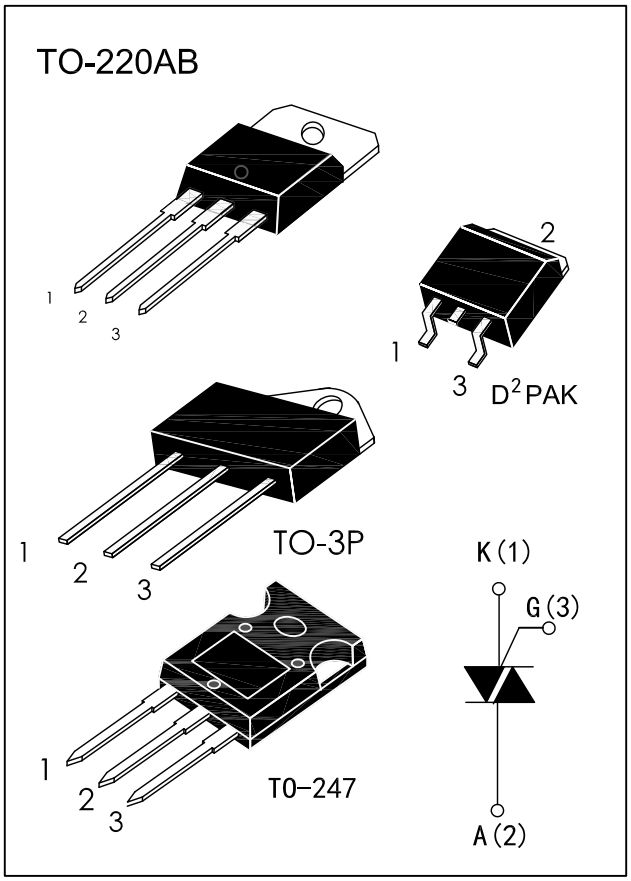

MAIN FEATURES

Symbol	Value	Unit
$I_{T(RMS)}$	25	A
V_{DRM}/V_{RRM}	600 to1200	V
V_{TM}	≤1.6	V

ABSOLUTE MAXIMUM RATINGS

Parameter		Symbol	Value	Unit
Average on-state current (Tc=79℃, 180° conduction half sine wave)		$I_{T(AV)}$	16	A
Storage junction temperature range Operrating junction temperature range		Tstg Tj	-40 to +150 -40 to +125	℃
Repetitive Peak Off-state Voltage Repetitive Peak Reverse Voltage	Tj=25℃	V_{DRM} V_{RRM}	600-1200 600-1200	V
Non repetitive Surge Peak Off-state Voltage Non repetitive Peak Reverse Voltage	Tj=25℃	V_{DSM} V_{RSM}	700-1300 700-1300	V
RMS on-state current(Tc=79℃, 180° conduction half sine wave)		$I_{T(RMS)}$	25	A
One cycle Non repetitive surge current	10ms sine pulse,rated VRRM applied 10ms sine pulse,no voltage applied	I_{TSM}	250 260	A
I^2t Value for fusing	10ms sine pulse,rated VRRM applied 10ms sine pulse,no voltage applied	I^2t	310 320	A^2s
Critical rate of rise of tumed-on current(Tj=25℃)		dI /dt	100	A/us
Peak gate current	tp=20us, Tj=125℃	I_{GM}	4	A
Average gate power dissipation	Tj=125℃	$P_{G(AV)}$	1	W

ELECTRICAL CHARACTERISTICS(Tj=25℃ unless otherwise specified)

Symbol	Test Condition		Tj			Unit
			-40℃	25℃	125℃	
I_{GT}	required DC gate current to trigger	MAX.	100	40	15	mA
V_{GT}	required DC gate voltage to trigger (anode supply=6V,resistive load)	MAX.	2.5	1.5	1.0	V
V_{GD}	DC gate voltage not to trigger(Tj=125℃,VDRM=ratedvalue)	MAX.	0.2			V
I_L	I_G=1.2I_{GT}	MAX.	----	80	----	mA
I_H	Holding current	MAX.	----	60	----	mA
dV/dt	V_D=67%V_{DRM} gate open Tj=125℃	MIN.			500	V/μs

STATIC CHARACTERISTICS

Symbol	Test Conditions		Value (MAX)	Unit
V_{TM}	I_{TM}=50A, tp=380uS	Tj=25℃	1.6	V
I_{DRM} / I_{RRM}	V_D=V_{DRM}	Tj=25℃	10	uA
	V_R=V_{RRM}	Tj=125℃	4	mA

THERMAL RESISTANCES

Symbol	Parameter		Value	Unit
Rth(j-c)	Junction to case (AC)	TO-247	0.6	℃/W
		TOP3 Insulated	0.7	
		D²PAK/TO-220AB	1.0	
		TO-220AB Insulated	1.9	

ORDERING INFORMATION

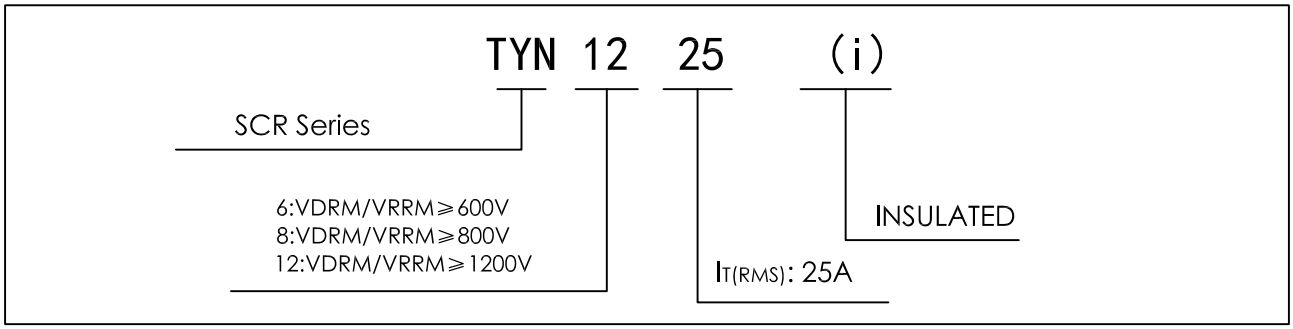

PACKAGE MECHANICAL DATA

TOP3

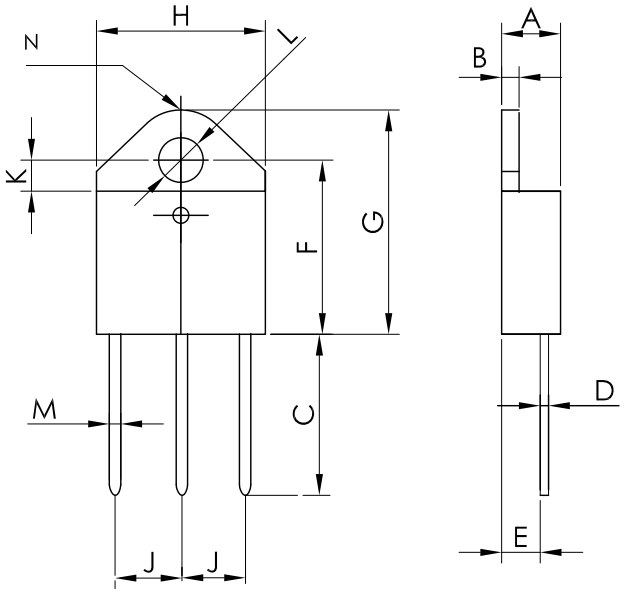

DIMENSIONS(mm)

	A	B	C	D	E	F	G	H	I	J	K	L	M	N
MAX	4.6	1.55	15.6	0.7	2.9	16.5	21.1	15.5	5.65	3.65	4.17	1.40		
TYP														4.60
MIN	4.4	1.45	14.35	0.5	2.7	15.8	20.4	15.1	5.4	3.4	4.08	1.20		

TO-247

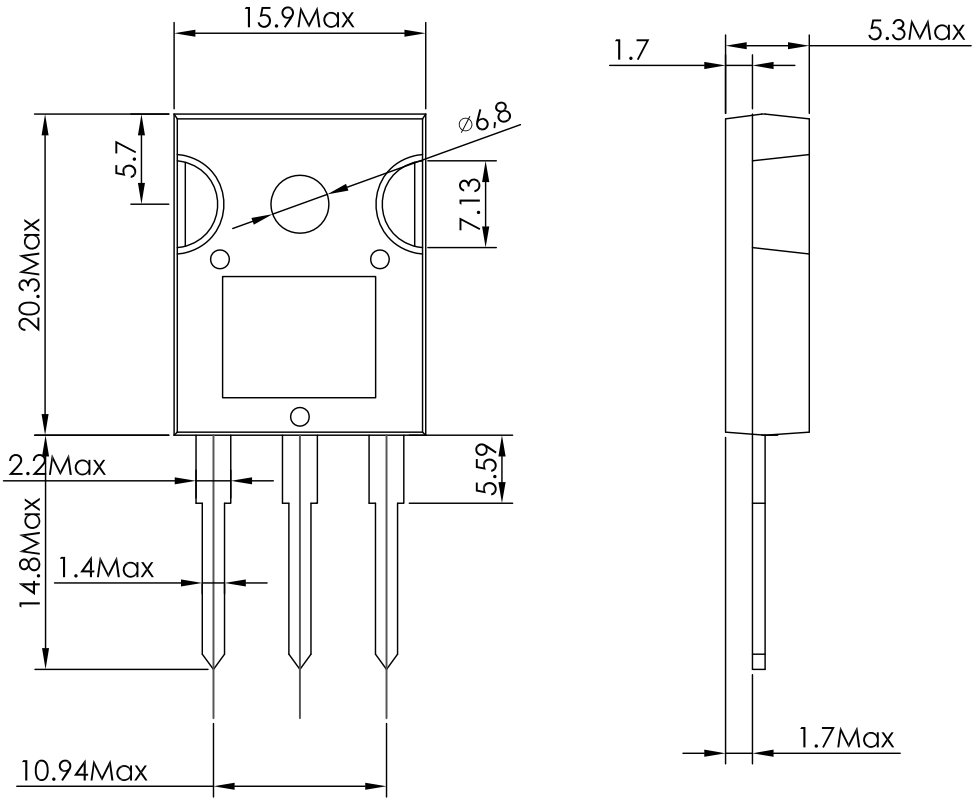

PACKAGE MECHANICAL DATA

TO-220AB

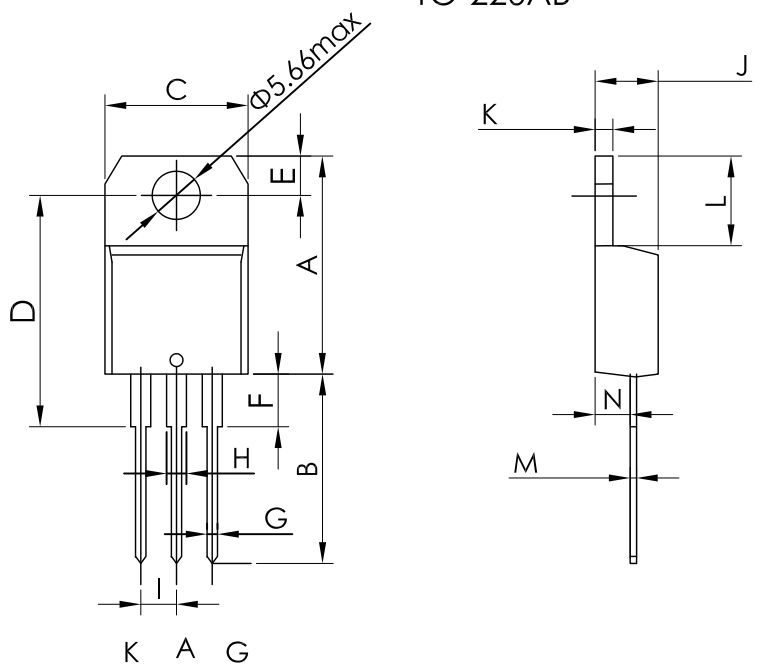

DIMENSIONS(mm)

	A	B	C	D	E	F	G	H	I	J	K	L	M	N
MAX	15.9	14.0	10.4	16.8	2.95		0.88	1.70	2.70	4.60	1.32	6.60	0.70	2.72
TYP				16.4		3.75								
MIN	15.2	13.0	10.0	15.8	2.65		0.61	1.14	2.40	4.40	1.23	6.20	0.49	2.40

D^2PAK

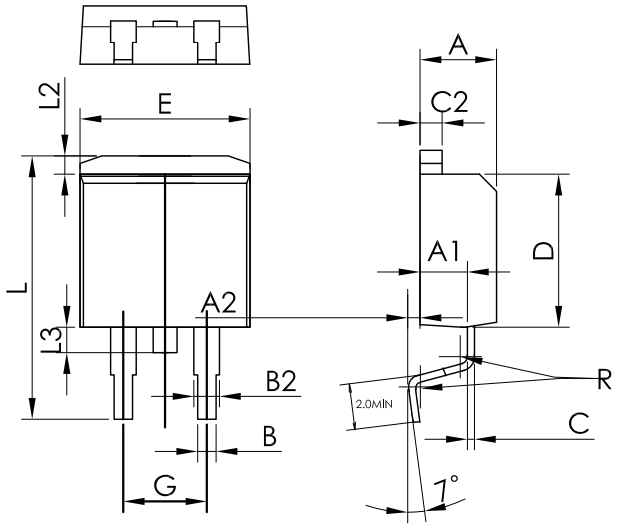

DIMENSIONS(mm)

	A	A1	A2	B	B2	C	C2	D	E	G	L	L2	L3	R
MIN	4.30	2.49	0.03	0.70	1.25	0.45	1.21	8.95	10.0	4.88	15.0	1.27	1.40	
TYP					1.40									0.40
MAX	4.60	2.69	0.23	0.93		0.60	1.36	9.35	10.28	5.28	15.85	1.40	1.75	

FIG.1: Maximum average power dissipation versus average on-state current

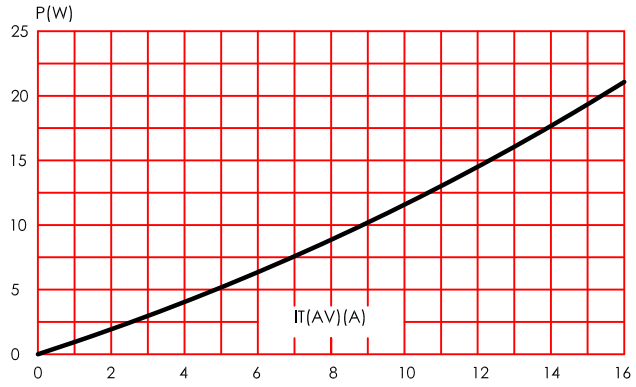

FIG.2: RMS on-state current versus case temperature.

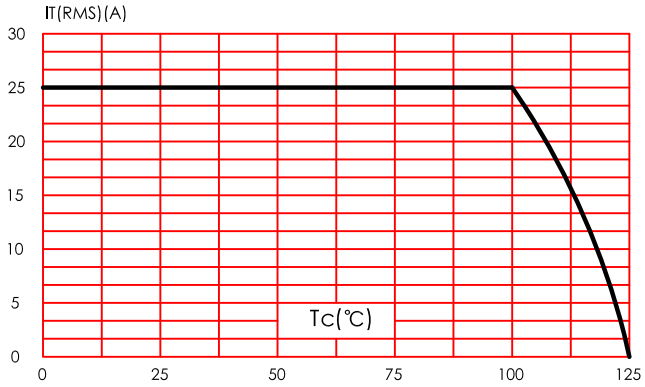

FIG.3: Relative variation of gate trigger current, holding current and latching current versus junction temperature.

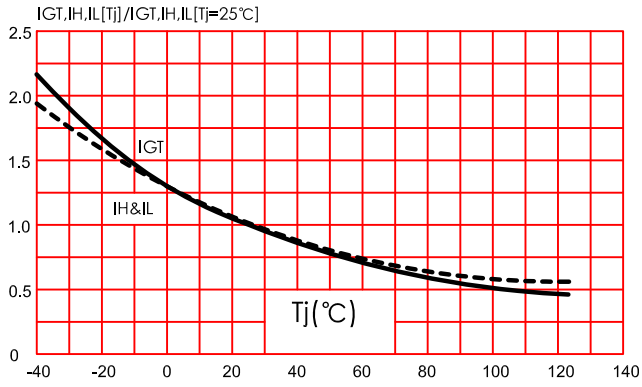

FIG.4: Surge peak on-state current versus number of cycles.

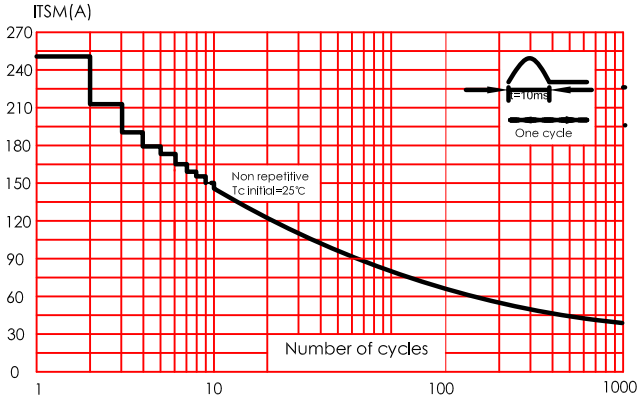

FIG.5: Non-repetitive surge peak on-state current for a sinusoidal pulse with width tp < 10 ms, and corresponding value of I^2t

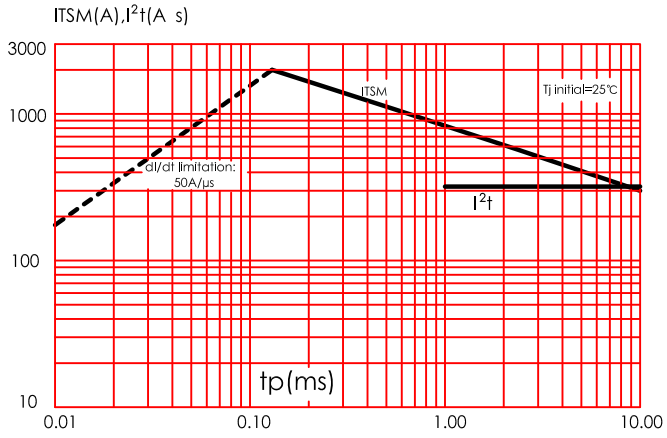
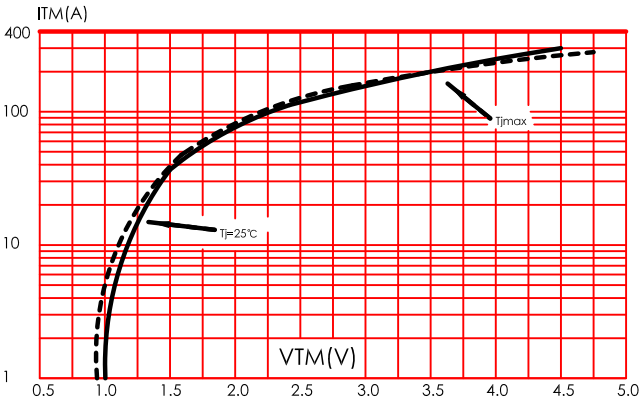
FIG.6: On-state characteristics (maximum values).