# Ultra fast Rectifier

# STTH1602CT

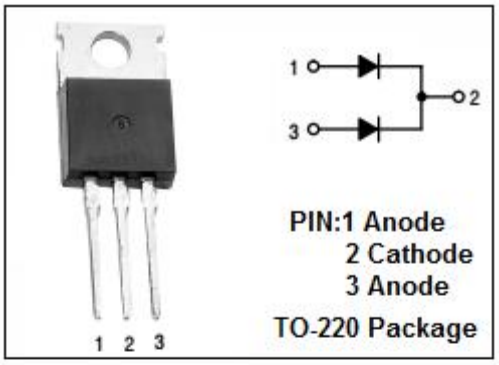


## FEATURES

- Ultrafast with soft recovery
- 175℃ Operating temperature
- Popular TO-220F package
- Minimum Lot-to-Lot variations for robust device performance and reliable operation

## APPLICATIONS

- Switching power supply
- Power switching circuits
- General purpose

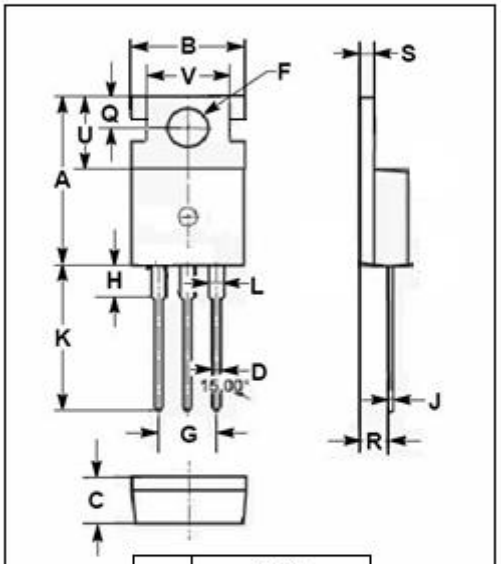


| DIM | mm MIN | mm MAX |
|---|---|---|
| A | 15.50 | 15.90 |
| B | 9.80 | 10.20 |
| C | 4.20 | 4.50 |
| D | 0.70 | 0.90 |
| F | 3.40 | 3.70 |
| G | 4.98 | 5.18 |
| H | 2.68 | 2.90 |
| J | 0.44 | 0.60 |
| K | 12.80 | 13.40 |
| L | 1.20 | 1.45 |
| Q | 2.70 | 2.90 |
| R | 2.30 | 2.70 |
| S | 1.29 | 1.35 |
| U | 6.45 | 6.65 |
| V | 8.66 | 8.86 |

## ABSOLUTE MAXIMUM RATINGS($T_a$=25℃)

| SYMBOL | PARAMETER | VALUE | UNIT |
|---|---|---|---|
| $V_{RRM}$<br>$V_{RWM}$<br>$V_R$ | Peak Repetitive Reverse Voltage<br>Working Peak Reverse Voltage<br>DC Blocking Voltage | 200 | V |
| $I_{F(AV)}$ | Average Rectified Forward Current | 30 | A |
| $I_{FSM}$ | Nonrepetitive Peak Surge Current<br>(Surge applied at rated load conditions half-wave, single phase, 60Hz) | 80 | A |
| $T_J$ | Junction Temperature | -65~175 | ℃ |
| $T_{stg}$ | Storage Temperature Range | -65~175 | ℃ |



Download from alldatasheet.com

## THERMAL CHARACTERISTICS

| SYMBOL | PARAMETER | MAX | UNIT |
|---|---|---|---|
| $R_{th\ j\text{-}c}$ | Thermal Resistance,Junction to Case per diode<br>Per device | 3.0<br>1.9 | ℃/W |

## ELECTRICAL CHARACTERISTICS($T_a$=25℃) (Pulse Test: Pulse Width=300 μs,Duty Cycle≤2%)

| SYMBOL | PARAMETER | CONDITIONS | MAX | UNIT |
|---|---|---|---|---|
| $V_F$ | Maximum Instantaneous Forward Voltage | $I_F$=8A ;Tj=25℃<br>$I_F$=16A ;Tj=25℃<br>$I_F$=8A ;Tj=125℃<br>$I_F$=16A ;Tj=125℃ | 1.1<br>1.25<br>0.89<br>1.05 | V |
| $I_R$ | Maximum Instantaneous Reverse Current | $V_R$= $V_{RWM;}$Tj=25℃<br>$V_R$= $V_{RWM;}$Tj=125℃ | 6<br>60 | μA |
| $t_{rr}$ | Maximum Reverse Recovery Time | $I_F$ =1A;$V_R$=30V;dIF/dt=100A/μs | 26 | ns |



Download from alldatasheet.com