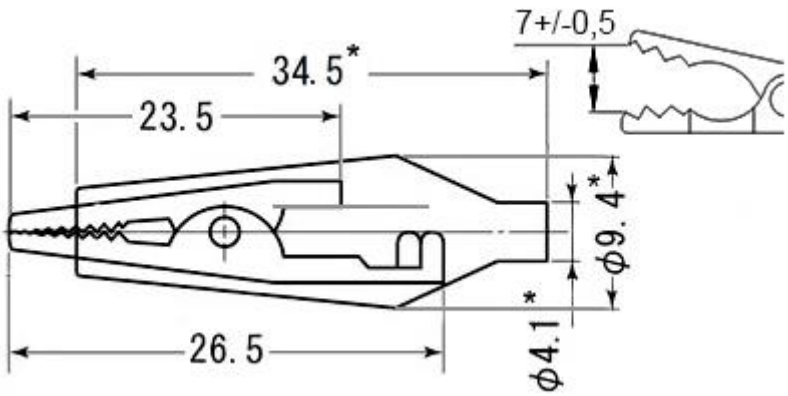
7+/-0,5
34.5*
23.5
ϕ9.4*
*
ϕ4.1
26.5